# RAYS CALIBRATION SERVICES PVT. LTD.

# CALIBRATION SERVICES

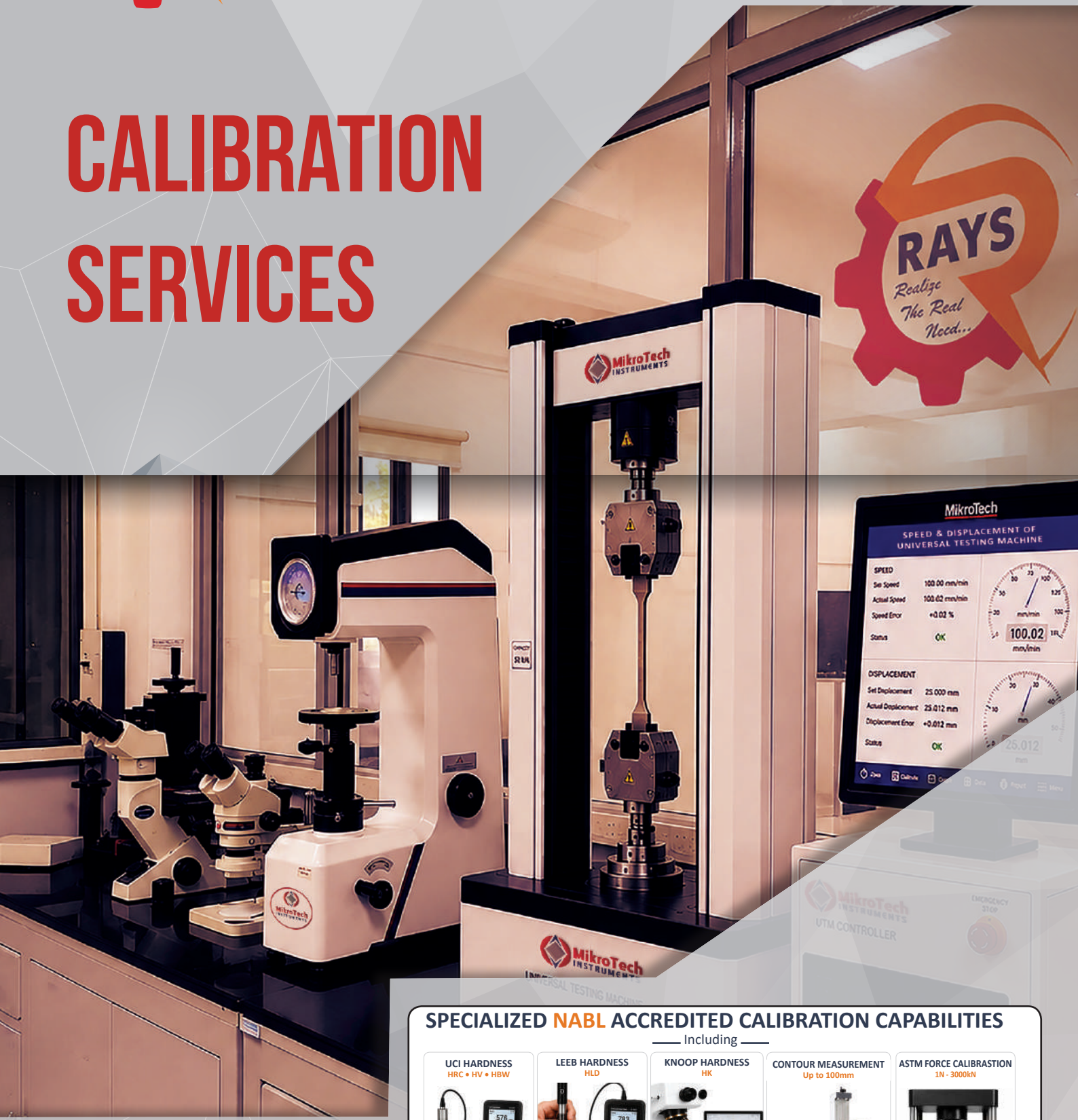


## SPECIALIZED NABL ACCREDITED CALIBRATION CAPABILITIES

Including

**UCI HARDNESS**
HRC • HV • HBW



Ultrasonic Contact Impedance for accurate & non-destructive hardness testing

**LEEB HARDNESS**
HLD



Rebound hardness testing for metals with high accuracy and repeatability

**KNOOP HARDNESS**
HK

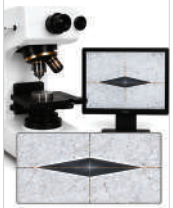

Micro-hardness testing with Knoop indenter for small or brittle materials

**CONTOUR MEASUREMENT**
Up to 100mm



High-precision surface contour and profile measurement for critical dimensions

**ASTM FORCE CALIBRASTION**
1N - 3000kN



Accurate force calibration as per ASTM standards across wide range

- NABL ACCREDITED ISO/IEC 17025:2017
- TRACEABLE TO NATIONAL / INTERNATIONAL STANDARDS
- QUALITY YOU CAN TRUST, RESULTS YOU CAN RELY ON
- ASSURED ACCURACY EVERY TIME
- COMPREHENSIVE REPORT WITH TRACEABILITY

SERVICE CATALOGUE

# OUR CUSTOMERS



National Accreditation Board for Testing and Calibration Laboratories

NABL

# CERTIFICATE OF ACCREDITATION

## RAYS CALIBRATION SERVICES PRIVATE LIMITED

**has been assessed and accredited in accordance with the standard**

## ISO/IEC 17025:2017

## "General Requirements for the Competence of Testing & Calibration Laboratories"

**for its facilities at**

**FIRST FLOOR, OFFICE NO. 02, PLOT NO. 12 - 16, 16A, 16B, 17, 18/10, EPI SYSTEMS BUILDING, SECTOR NO. 7, BHOSARI, PUNE, MAHARASHTRA, INDIA**

**in the field of**

## CALIBRATION

**Certificate Number:** NABLC0826MH04888

**Issue Date:** 04/08/2026 **Valid Until:** 03/08/2030

**This certificate remains valid for the Scope of Accreditation as specified in the annexure subject to continued satisfactory compliance to the above standard & the relevant requirements of NABL.**
**(To see the scope of accreditation of this laboratory, you may also visit NABL website www.nabl-india.org)**

**Name of Legal Entity:** RAYS CALIBRATION SERVICES PRIVATE LIMITED

**Signed for and on behalf of NABL**

**Anita Rani**
**Director**

**Dr. Ramanand N. Shukla**
**Chief Executive Officer**

# CALIBRATION TERMINOLOGY

| Terms | Definition |
|---|---|
| **Calibration** | **Calibration** is the process of comparing a measuring instrument with a reference standard of known accuracy to determine and record its measurement error. Calibration does **not** automatically adjust the instrument. |
| **Verification** | **Verification** is the confirmation that an instrument meets the specified requirements or acceptance criteria after calibration or testing. |
| **Adjustment** | **Adjustment** is the process of bringing an instrument's indication closer to the true value by mechanical, electrical, or software correction. It is performed only when necessary. |
| **Traceability (Metrological Traceability)** | **Traceability** is the property by which a measurement result can be related to national or international standards through an unbroken chain of calibrations, each contributing to measurement uncertainty. |
| **UIM (Uncertainty in Measurement)** | **UIM** is the estimated range within which the true value of a measurement is expected to lie, expressed with a stated level of confidence. |
| **CMC (Calibration and Measurement Capability)** | **CMC** is the best measurement capability that a calibration laboratory can achieve under normal operating conditions as recognized by its accreditation body. |
| **Calibration Interval** | The **Calibration Interval** is the recommended period between two successive calibrations to ensure continued measurement accuracy and reliability. |
| **DUC (Device Under Calibration)** | **DUC** is the instrument or equipment whose calibration is being performed. |
| **UUC (Unit Under Calibration)** | **UUC** stands for **Unit Under Calibration**. It has the same meaning as DUC and refers to the item being calibrated. |
| **NABL** | **National Accreditation Board for Testing and Calibration Laboratories (India)** is the accreditation body that assesses and accredits testing and calibration laboratories according to ISO/IEC 17025. |
| **NIST** | **National Institute of Standards and Technology (USA)** develops measurement standards and provides traceability for measurements in the United States. |
| **NPL** | **National Physical Laboratory (India)** is India's National Metrology Institute responsible for maintaining national measurement standards and providing traceability. |
| **Standard** | A **Standard** is a reference instrument, material, or document used to establish, maintain, or verify measurement accuracy. |
| **IEC** | In NABL context, **IEC** stands for the **International Electro-technical Commission**. It jointly publishes global standards (such as ISO/IEC 17025) used to assess laboratory competence. |
| **ISO** | **International Organization for Standardization** develops internationally accepted standards to ensure quality, safety, and consistency. |
| **IS** | **Indian Standard (IS)** is a standard published by the **Bureau of Indian Standards (BIS)** for products, systems, and testing methods in India. |
| **ASTM** | **ASTM International** develops globally recognized technical standards for materials, products, systems, and testing methods. |
| **Error** | **Error** is the difference between the measured value and the true or reference value. Error may be positive or negative. |
| **Non-Uniformity** | **Non-Uniformity** is the variation in a measured parameter at different locations or points where the value is expected to be uniform (e.g. temperature distribution in a furnace). |
| **Measurement Uncertainty** | **Measurement Uncertainty** is a quantified parameter associated with a measurement result that indicates the dispersion of values reasonably attributable to the measured. |

## Calibration of Portable Leeb Hardness Testing Machine

| | |
|---|---|
| **Indirect Verification** | **Scales:** HLD |
| **Method/Procedure** | ASTM A-956 |
| Note: Spear parts and repairing facility available | |




## Calibration of Portable Ultrasonic Hardness (UCI) Testing Machine

| | |
|---|---|
| **Indirect Verification** | **Scales:** HV UCI, HRC UCI, HBW UCI |
| **Method/Procedure** | ASTM A-1038 |
| Note: Spear parts and repairing facility available | |

## Calibration of Rockwell / Portable Rockwell Hardness Testing Machine

| | |
|---|---|
| **Indirect Verification** | **Scales:** HRA, HRBW, HRC, HR15N, HR30N, HR45N, HR15TW, HR30TW, HR45TW |
| **Direct Verification** | **Parameters:**<br>• Diamond Indenter<br>• Ball Indenter<br>• Test Force<br>• Testing Cycle<br>• Hysteresis (Recovery)<br>• Depth of Indentation |
| **Method/Procedure** | IS 1586-2, ISO 6508-2, ASTM E-18 |
| Note: Spear parts and repairing facility available | |




## Calibration of Brinell / Portable Brinell Hardness Machine

| | |
|---|---|
| **Indirect Verification** | **Scales:** HBW 2.5/15.625, HBW 2.5/31.25, HBW 2.5/62.5, HBW 2.5/187.5, HBW 5/250, HBW 5/750, HBW 10/500, HBW 10/1000, HBW 10/3000 |
| **Direct Verification** | **Parameters:**<br>• Indentation Measuring System<br>• Ball Indenter<br>• Test Force<br>• Testing Cycle |
| **Method/Procedure** | IS 1500-2, ISO 6506-2 & ASTM E-10 |
| Note: Spear parts and repairing facility available | |




## Calibration of Vickers / Micro-Vickers Hardness Testing Machine

| | |
|---|---|
| **Indirect Verification** | **Scales:** HV 0.025, HV 0.05, HV 0.1, HV 0.2, HV0.3, HV 0.5, HV 1, HV 3, HV 5, HV 10, HV 20, HV30, HV 50 |
| **Direct Verification** | **Parameters:**<br>• Indentation Measuring System<br>• Vickers Indenter<br>• Test Force<br>• Testing Cycle |
| **Method/Procedure** | IS 1501-2, ISO 6507-2, ASTM E-92 & ASTM E-384 |
| Note: Spear parts and repairing facility available | |



# CALIBRATION SERVICES

## Calibration of Knoop Hardens Testing Machine

| | |
|---|---|
| **Indirect Verification** | **Scales:** HK0.2, HK0.5 |
| **Direct Verification** | **Parameters:**<br>• Indentation Measuring System<br>• Test Force |
| **Method/Procedure** | IS 6885-2, ISO 4545-2,<br>ASTM E-92, ASTM E-384 |
| Note: Spear parts and repairing facility available | |



## Calibration of Shore Hardness Tester

| | |
|---|---|
| **Shore Hardness Type** | Shore D |
| **Shore Hardness Parameter (for all types of Shore)** | Indenter of Shore Hardness |
| **Method/Procedure** | ISO 48- 9, ASTM D-2240, Comparison Method |
| Note: Spear parts and repairing facility available | |



## Calibration of Impact Testing Machine

| | |
|---|---|
| **Charpy (Direct & Indirect Verification)** | 0 – 500J (IS 1757-2, ISO 148-2, ASTM E-23) |
| **Izod (Direct Verification)** | 0 - 170J (BS 131-4) |
| **Plastic Impact (Direct Verification)** | 0 - 25J (ISO 13802, ASTM D6110, ASTM D256) |
| **Method/Procedure** | IS 1757-2, ISO 148-2, ASTM E-23, ISO 13802, ASTM D6110, ASTM D256, BS 131-4 |
| NIST & ISO test samples available on demand for indirect verification | |
| Note: Spear parts and repairing facility available | |



## Calibration of Push-Pull Gauge

| | |
|---|---|
| **Capacity** | 10N - 950N |
| **Method/Procedure** | VDI: 2624 Part 2 |
| Note: Spear parts and repairing facility available | |



## Calibration of Universal Testing Machine (UTM), Compression Testing Machine (CTM), Spring Testing Machine (STM), Tensile Testing Machine (TTM) & Creep Testing Machine

| | |
|---|---|
| **Compression Capacity** | 1N - 3000kN |
| **Tension Capacity** | 1N - 1000kN |
| **Creep Testing Machine** | 1N - 100kN |
| **Method/Procedure** | IS 1828 (Part 1),<br>ISO 7500-1 & ASTM E4 |
| Note: Spear parts and repairing facility available | |



| Calibration of Electronic Extensometer, COD Gauge | |
|---|---|
| **Range** | 0 - 25mm |
| **Method/Procedure** | IS 12872, ISO 9513, ASTM E-83 |
| Note: Spear parts and repairing facility available | |

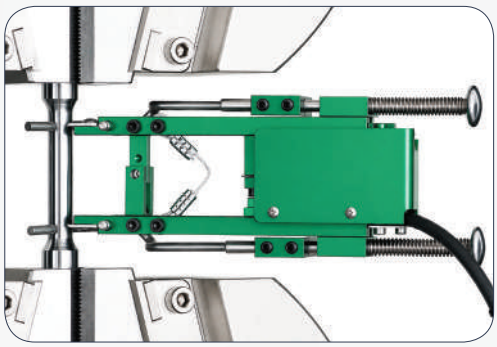

| Calibration of Long Travel Extensometer | |
|---|---|
| **Range** | 0 - 1000mm |
| **Method/Procedure** | IS 12872, ISO 9513, ASTM E-83 |
| Note: Spear parts and repairing facility available | |

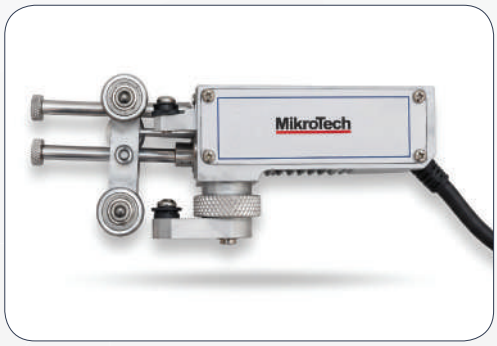


| Calibration of Speed of Universal Testing Machine | |
|---|---|
| **Range** | 0 - 500mm/min |
| **Method/Procedure** | ASTM E-2658 |




| Calibration of Displacement of Testing Machine | |
|---|---|
| **Range** | 0 - 1000mm |
| **Method/Procedure** | ASTM E-2309 |

| Calibration of Erichsen Cupping Testing Machine – for Travel of Punch | |
|---|---|
| **Range** | 0 - 20mm |
| **Method/Procedure** | IS 10175, ISO 20482 |
| Note: Spear parts and repairing facility available | |




| Calibration of Coating Thickness Gauge | |
|---|---|
| **Range** | 10µm - 5000µm |
| **Method/Procedure** | Comparison Method |
| Note: Spear parts and repairing facility available | |



# CALIBRATION SERVICES

| Calibration of Foils | |
|---|---|
| **Range** | 10µm - 5000µm |
| **Method/Procedure** | Comparison Method |




| Calibration of Surface Roughness Specimen | |
|---|---|
| **Parameter** | Ra, Rz, Rmax |
| **Method/Procedure** | Comparison Method |




| Calibration of Surface Roughness Tester | |
|---|---|
| **Parameter** | Ra, Rz, Rmax |
| **Method/Procedure** | Comparison Method |
| Note: Spear parts and repairing facility available | |

| Calibration of Notch Profile Template of Impact Testing Machine | |
|---|---|
| **Parameter** | U, V Notch Template |
| **Method/Procedure** | Direct Method |
| Note: U, V Notch Template available with Calibration | |

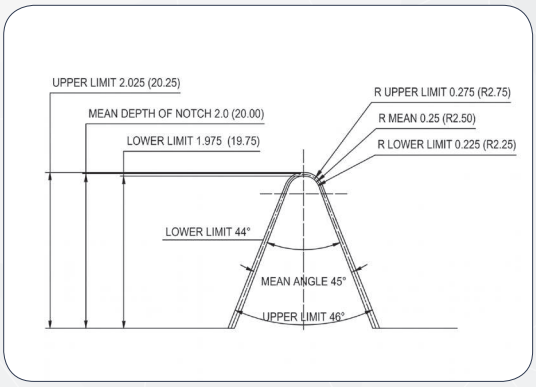


| Calibration of Anvil & Strikers of Impact Testing Machine | |
|---|---|
| **Impact Striker Parameter (2mm/8mm)** | Radius, Linear, Angle |
| **Impact Anvil Parameter (ASTM/Combined)** | Radius, Linear, Angle |
| **Method/Procedure** | IS 1757-2, ISO 148-2, ASTM E-23 |
| Note: Impact strikers available with Calibration | |

| Calibration of Self Centering Tong of Impact Testing Machine | |
|---|---|
| **Parameters** | Linear, Angle |
| **Method/Procedure** | IS 1757-2, ISO 148-2, ASTM E-23 |
| Note: Impact self centering tong available with Calibration | |



| Calibration of Contour Profile Testing Machine | |
|---|---|
| **Parameters** | • Linear<br>• Straightness<br>• Radius<br>• Angle |
| **Method/Procedure** | Comparison Method |




| Calibration of Electronic Height Gauge / 2D Electronic Height Gauge | |
|---|---|
| **Parameters** | • Linear (0 - 600mm)<br>• Squareness (0 - 600mm) |
| **Method/Procedure** | Comparison Method |




| Calibration of Metallurgical Microscope / Stereo Zoom Microscope (Magnification) | |
|---|---|
| **Range** | Up to 1000x |
| **Method/Procedure** | ASTM E-1951 |
| Note: Spear parts & repairing facility available | |



| Calibration of Profile Projector / Vision Measuring Machine | |
|---|---|
| **Parameters** | • X-Y stage (up to 300mm)<br>• Magnification (up to 100x)<br>• Angle (up to $360^0$) |
| **Method/Procedure** | Comparison Method |



## Indenters Rockwell, Brinell, Vickers

- Diamond Indenter
- Vickers Indenter
- Knoop Indenter
- 5mm Tungsten Carbide Ball Indenter
- 10mm Tungsten Carbide Ball Indenter
- 1/16" Tungsten Carbide Ball Indenter
- 1/8" Ball Indenter
- 1/4" Ball Indenter
- 1/2" Ball Indenter
- Special Extended Indenter of Rockwell Hardness Machine



## Testing Table of Rockwell, Brinell, Vickers

- Flat table (40mm, 70mm, 100mm, 200mm, 300mm)
- V table (40mm, 70mm)
- Shallow V table (5mm, 10mm, 20mm)
- Customized testing table



## Test Blocks

- **Rockwell:** HRA, HRBW, HRC, HR15, HR30N, HR45N, HR15TW, HR30TW, HR45TW, HRL, HRF
- **Vickers:** HV 0.01, HV0.025, HV0.05, HV0.1 HV0.2, HV 0.3, HV0.5, HV1
- **Knoop:** HK 0.01, HK0.025, HK0.05, HK0.1 HK0.2
- **Brinell:** 2.5/15.625, 2.5/31.25, 2.5/62.5, 2.5/187.5, 5/250, 5/750, 10/500, 10/1000, 10/3000 HBW
- **Leeb Hardness:** HLD
- **UCI Hardness:** UCI HV, UCI HRC, UCI BHN




## Griping's Universal Testing Machines

- Flat seat (Grip) jaw
- Round seat (Grip) jaw
- Rack Jaw
- Pinion shaft

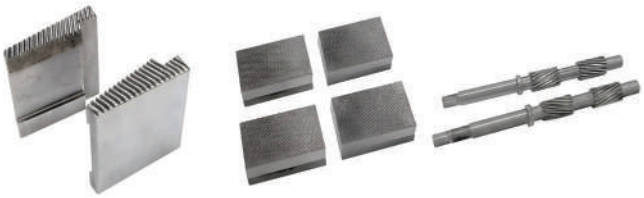

Rack Jaw | Grip Jaw | Jaw Pinion

## Subzero Temperature Bath of Charpy Impact Testing Machine

### Specification

- **Temperature Range:** up to minus – 200$^{0}$c
- **Max Capacity:** 30 plus samples with the maintaining distance 25mm for all side
- **Resolution:** of 0.1$^{0}$c
- **Supply:** 240v AC
- Powder catted mild steel body
- Main bath SS 310
- Mild steel round mesh 3 No's zinc plated
- Temperature indicator with PT-100 sensor SS-310
- Temperature indicator mounting box mild steel



## Lateral Expansion Gauge for Charpy Impact Testing Machine



### Features

Confirm to ASTM-E23 & ISO-148-1

- Corrosion free parts
- Heavy base with rubber pad to avoid slipping and movement during measurement
- Quick & easy measurement with 10µm plunger dial gauge
- Options are available with analogue and digital in both inch and mm

## Anvils of Charpy & Izod Impact Testing Machine

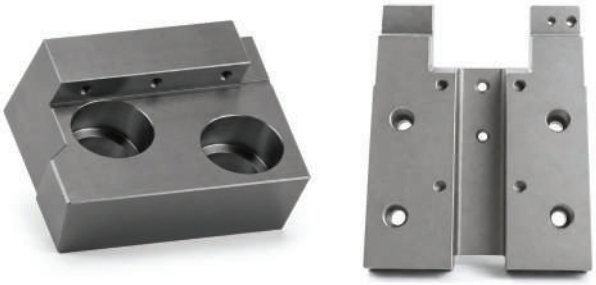

Applicable to All FINE Type Impact M/c

Applicable to All FIE Type Impact M/c.

Applicable to All FIE, FINE, MCS, META TEST Type Impact Machines

Usable for Charpy & IZOD test

Confirm to ASTM E23 and ISO 148-2

- We are also manufacturing Anvils & strikers for impact machines of INSTRON, ZWICK, Tinius Olsen, MTS, SANS, etc. on demand.

## Strikers of Charpy & Izod Impact Testing Machine



Applicable to All FINE Type Impact M/c

Applicable to All FIE Type Impact M/c

Applicable to All FIE, FINE, MCS, META TEST Type Impact Machines

Usable for Charpy & IZOD test

Confirm to ASTM E23 and ISO 148-2

- We are also manufacturing Anvils & strikers for impact machines of INSTRON, ZWICK, Tinius Olsen, MTS, SANS, etc. on demand.

## V or U Notch Cutting Broach of Charpy & Izod Impact Testing Machine



Applicable for all type of machine

- We are also manufacturing Broach for impact machines of INSTRON, ZWICK, Tinius Olsen, MTS, SANS, etc. on demand.

## Notch Profile Templet of Charpy & Izod Impact Testing Machine

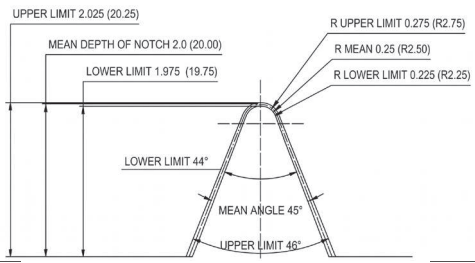


Available as per all applicable standard

## Self-centring Tong of Charpy & Izod Impact Testing Machine



# RAYS CALIBRATION SERVICES PVT. LTD.

NABLC0826MH04888

## ABOUT US

**Precision in Measurement. Confidence in Quality.**

**Rays Calibration Services Pvt. Ltd. (RCSPL)** is a Pune based technical organization specializing in Calibration, Metrology, Metallography, Inspection Solutions and supplies of Material Testing Machines. Our laboratory is accredited to **ISO/IEC 17025:2017** with a comprehensive Mechanical Calibration scope covering Hardness, Force, Impact, Dimension and related testing-machine parameters.




## OUR KEY CAPABILITIES IN CALIBRATION UNDER ACCREDITATION

### HARDNESS CALIBRATION
• Rockwell • Brinell • Vickers • Micro-Vickers
• Knoop • Leeb • UCI • Shore

### FORCE & TESTING MACHINES
• UTM • CTM • Spring & Creep Testing Machines
• Force Measuring Systems

### IMPACT TESTING
• Charpy • Izod • Plastic Impact Testing Machines

### DIMENSION & METROLOGY
• Vision Measuring • Profile Projectors • Contour Measurement
• Height Gauges • Extensometers • COD Gauges
• Surface Roughness • Metallurgical Microscopes

## COMPLETE TECHNICAL SUPPORT

Along with calibration, we provide equipment supply, application support, installation & commissioning, operator training, preventive maintenance, AMC, repair and after-sales technical support. Our solutions serve the Automotive, Aerospace, Steel, Foundry, Manufacturing, Engineering, Research, Education and Quality Assurance sectors.

**Delivering Precision**

**Building Confidence**

**Driving Quality**

## YOUR TRUSTED PARTNER FOR

Calibration | Metrology | Material Testing Machines | Inspection Solutions

Rays Calibration Services Pvt. Ltd.,
Plot No. 12 to 16A, 16B, 17, 18/10,
1st Floor, EPI Systems Building,
Sector No. 7, Near Vishweshwar Chowk,
Bhosari MIDC, Pune – 411026

+91 9370584101 / 9511277840

www.rayscalibration.com

support@rayscalibration.com

Service Catalogue

Product Catalogue